L4931

Very low drop voltage regulators with inhibit

Datasheet - production data

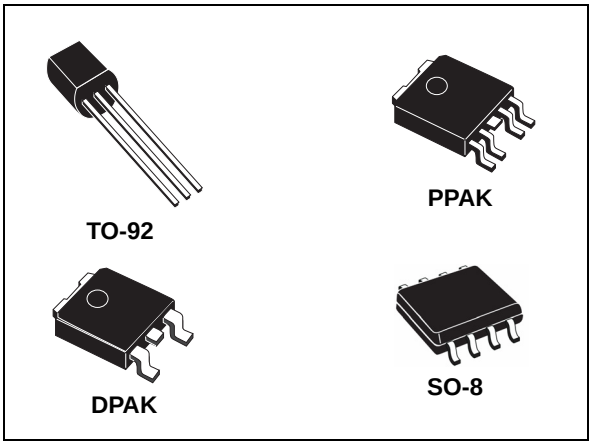

Features

- Very low dropout voltage (0.4 V)
- Very low quiescent current
- Typ. 50 µA in OFF mode, 600 µA in ON mode
- Output current up to 250 mA
- Logic controlled electronic shutdown
- Output voltages: 2.7; 3.3; 3.5; 5; 8; 12 V
- Automotive-grade product: 2.7 V, 3.3 V V_{OUT} in SO-8 package only
- Internal current and thermal limit
- Only 2.2 µF for stability
- Available in ± 1% (AB) or 2% (C) selection at 25 °C
- Supply voltage rejection: 70 dB typ. for 5 V version
- Temperature range: from -40 to 125 °C

Description

The L4931 is a very low drop regulator available in SO-8, DPAK, PPAK and TO-92 packages and in a wide range of output voltages.

The very low drop voltage (0.4 V) and the very low quiescent current make it particularly suitable for low noise, low power applications and especially in battery-powered systems.

A TTL compatible shutdown logic control function is available in PPAK and SO-8 packages. This means that when the device is used as a local regulator, a part of the board can be put in standby mode, decreasing the total power consumption. It requires only a 2.2 µF capacitor for stability allowing space and cost saving.

The L4931 is available as automotive-grade in SO-8 package only. This device is qualified according to the specification AEC-Q100 of the automotive market, in the temperature range from 40 °C to 125 °C, and the statistical tests: PAT, SYL, SBL are performed.

This is information on a product in full production. www.st.com

Contents

1 Diagram 5

2 Pin configuration 6

3 Maximum ratings 7

4 Application circuit 8

5 Electrical characteristics 9

6 Typical application 22

7 Package mechanical data 23

8 Packaging mechanical data 31

9 Ordering information 36

10 Revision history 37

List of tables

Table 1. Absolute maximum ratings . . . 7
Table 2. Thermal data . . . 7
Table 3. L4931Cxx27 electrical characteristics . . . 9
Table 4. L4931Cxx27-TRY (automotive-grade) electrical characteristics . . . 10
Table 5. L4931ABxx33 electrical characteristics . . . 11
Table 6. L4931Cxx33 electrical characteristics . . . 12
Table 7. L4931Cxx33-TRY (automotive-grade) electrical characteristics . . . 13
Table 8. L4931ABxx35 electrical characteristics . . . 14
Table 9. L4931Cxx35 electrical characteristics . . . 15
Table 10. L4931ABxx50 electrical characteristics . . . 16
Table 11. L4931Cxx50 electrical characteristics . . . 17
Table 12. L4931ABxx80 electrical characteristics . . . 18
Table 13. L4931Cxx80 electrical characteristics . . . 19
Table 14. L4931ABxx120 electrical characteristics . . . 20
Table 15. L4931Cxx120 electrical characteristics . . . 21
Table 16. TO-92 mechanical data . . . 23
Table 17. PPAK mechanical data . . . 25
Table 18. DPAK mechanical data . . . 27
Table 19. SO-8 mechanical data . . . 30
Table 20. TO-92 tape and reel mechanical data . . . 31
Table 21. PPAK and DPAK tape and reel mechanical data . . . 33
Table 22. SO-8 tape and reel mechanical data . . . 35
Table 23. Order codes . . . 36
Table 24. Document revision history . . . 37

List of figures

Figure 1. Schematic diagram . . . 5
Figure 2. Pin connections (top view) . . . 6
Figure 3. Test circuit . . . 8
Figure 4. Line regulation vs temperature . . . 22
Figure 5. Dropout voltage vs temperature . . . 22
Figure 6. Supply current vs input voltage . . . 22
Figure 7. Supply current vs temperature . . . 22
Figure 8. Short-circuit current vs dropout voltage . . . 22
Figure 9. SVR vs input voltage signal frequency . . . 22
Figure 10. TO-92 drawings . . . 24
Figure 11. PPAK drawings . . . 26
Figure 12. DPAK drawings . . . 28
Figure 13. DPAK footprint . . . 29
Figure 14. SO-8 drawings . . . 30
Figure 15. TO-92 tape and reel dimensions . . . 32
Figure 16. Tape for PPAK and DPAK . . . 34
Figure 17. Reel for PPAK and DPAK . . . 34
Figure 18. SO-8 tape and reel dimensions . . . 35

1 Diagram

Figure 1. Schematic diagram

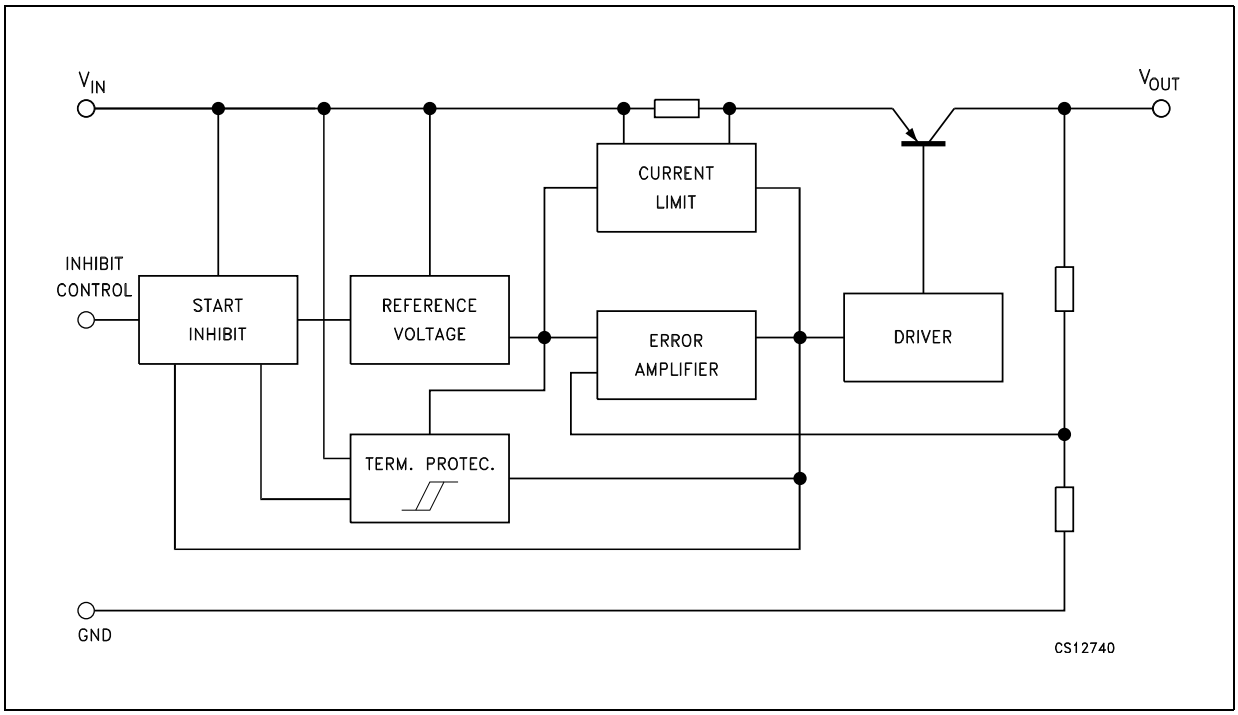

2 Pin configuration

Figure 2. Pin connections (top view)

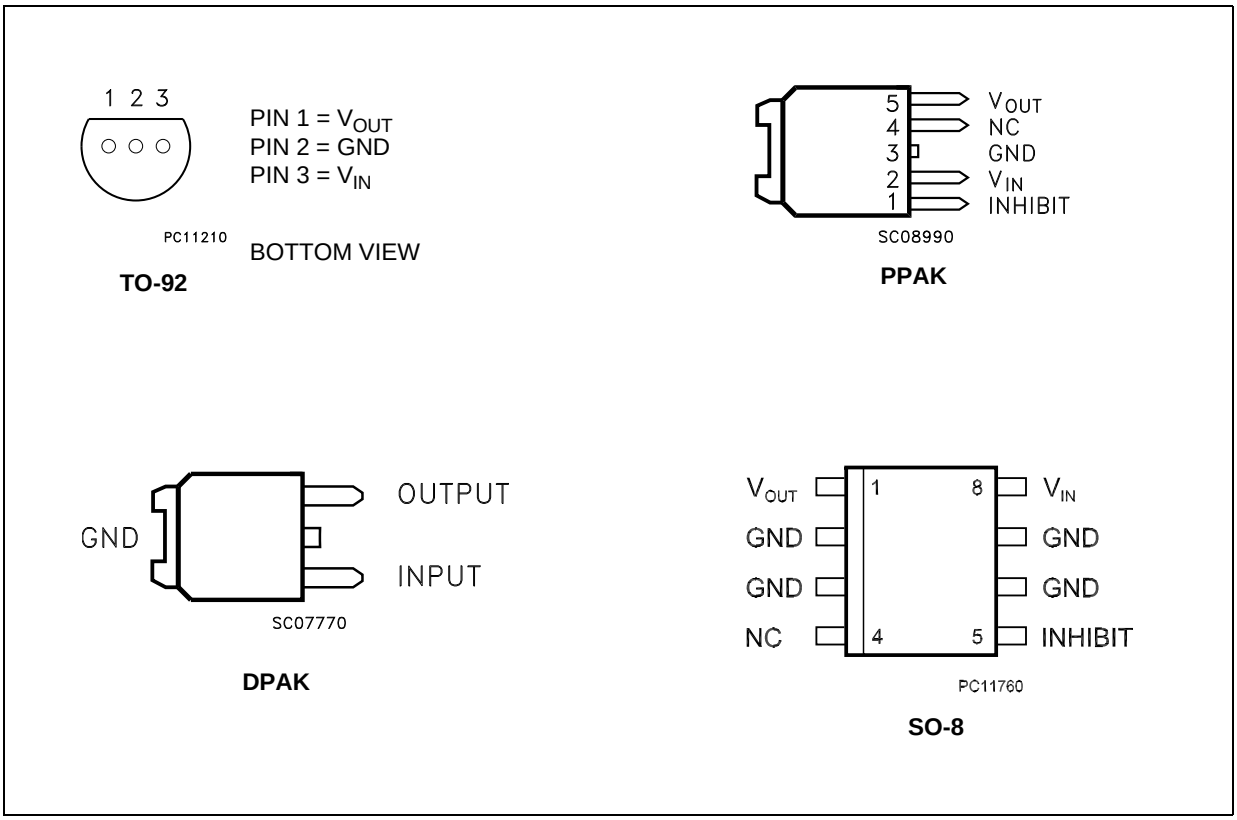

3 Maximum ratings

Table 1. Absolute maximum ratings

Symbol	Parameter	Value	Unit
V_I	DC Input voltage	20	V
I_O	Output current	Internally limited	mA
P_D	Power dissipation	Internally limited	mW
T_{STG}	Storage temperature range	-40 to 150	°C
T_{OP}	Operating junction temperature range	-40 to 125	°C

Note: Absolute maximum ratings are those values beyond which damage to the device may occur. Functional operation under these condition is not implied.

Table 2. Thermal data

Symbol	Parameter	TO-92	DPAK	SO-8	Unit
R_{thJC}	Thermal resistance junction-case		8	20	°C/W
R_{thJA}	Thermal resistance junction-ambient	200	100	55	°C/W

4 Application circuit

Figure 3. Test circuit

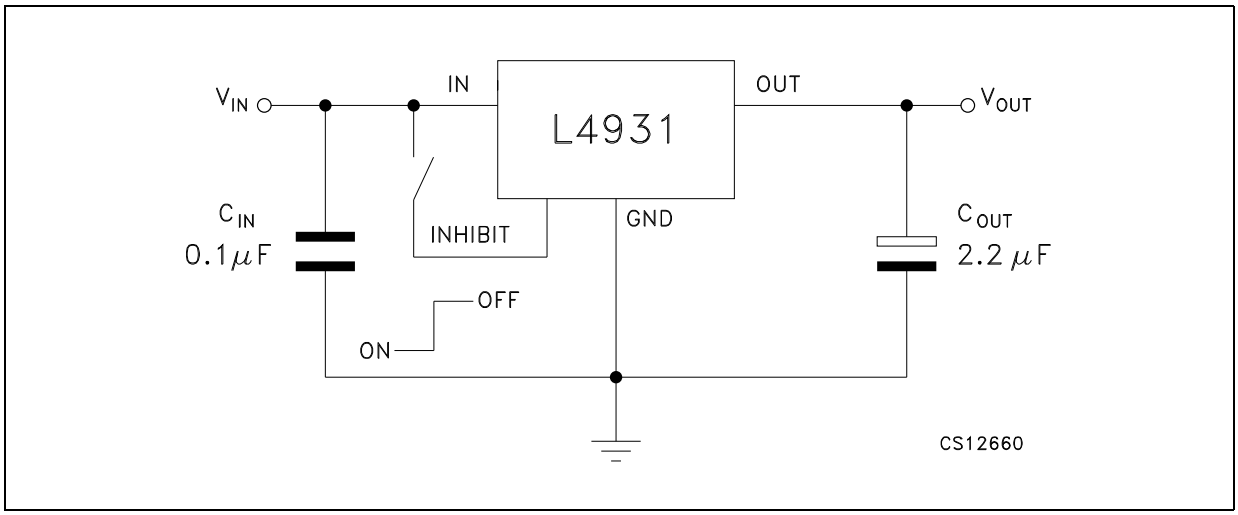

5 Electrical characteristics

(Refer to the test circuits, T_A = 25 °C, C_I = 0.1 µF, C_O = 2.2 µF unless otherwise specified).

Table 3. L4931Cxx27 electrical characteristics

Symbol	Parameter	Test conditions		Min.	Typ.	Max.	Unit
V_O	Output voltage	I_O = 5 mA, V_I = 4.7 V		2.646	2.7	2.754	V
		I_O = 5 mA, V_I = 4.7 V, T_A = -25 to 85 °C		2.592		2.808	
V_I	Operating input voltage	I_O = 250 mA				20	V
I_{out}	Output current limit				300		mA
DV_O	Line regulation	V_I = 3.4 to 20 V, I_O = 0.5 mA			3	18	mV
DV_O	Load regulation (1)	V_I = 3.6 V, I_O = 0.5 to 250 mA			3	18	mV
I_d	Quiescent current ON mode	V_I = 3.6 to 20 V, I_O = 0 mA			0.6	1	mA
		V_I = 3.6 to 20 V, I_O = 250 mA			4	6	
	OFF mode	V_I = 6 V			50	100	µA
SVR	Supply voltage rejection	I_O = 5 mA V_I = 4.6 ± 1 V	f = 120 Hz		74		dB
			f = 1 kHz		71		
			f = 10 kHz		55		
eN	Output noise voltage	B = 10 Hz to 100 kHz			50		µV
V_d	Dropout voltage (1)	I_O = 250 mA			0.4	0.6	V
		I_O = 250 mA, T_A = -40 to 125 °C				0.8	V
V_{IL}	Control input logic low	T_A = -40 to 125 °C				0.8	V
V_{IH}	Control input logic high	T_A = -40 to 125 °C		2			V
I_I	Control input current	V_I = 6 V, V_C = 6 V			10		µA
C_O	Output bypass capacitance	ESR = 0.1 to 10 W, I_O = 0 to 250 mA		2	10		µF

1. For SO-8 package the maximum limit of load regulation and dropout should be increased by 20 mV.

(Refer to the test circuits, T_A = -40 to 125 °C, C_I = 0.1 µF, C_O = 2.2 µF unless otherwise specified).

Table 4. L4931Cxx27-TRY (automotive-grade) electrical characteristics

Symbol	Parameter	Test conditions		Min.	Typ.	Max.	Unit
V_O	Output voltage	I_O = 5 mA, V_I = 4.7 V, T_A = 25 °C		2.646	2.7	2.754	V
		I_O = 5 mA, V_I = 4.7 V		2.592		2.808	
V_I	Operating input voltage	I_O = 250 mA				20	V
I_{out}	Output current limit	T_A = 25 °C			300		mA
ΔV_O	Line regulation	V_I = 3.4 to 20 V, I_O = 0.5 mA				20	mV
ΔV_O	Load regulation	V_I = 3.6 V, I_O = 0.5 to 250 mA				38	mV
I_d	Quiescent current ON mode	V_I = 3.6 to 20 V, I_O = 0 mA				1	mA
		V_I = 3.6 to 20 V, I_O = 250 mA				6	
	OFF mode	V_I = 6 V				100	µA
SVR	Supply voltage rejection	I_O = 5 mA V_I = 4.6 ± 1 V T_A = 25 °C	f = 120 Hz		74		dB
			f = 1 kHz		71		
			f = 10 kHz		55		
eN	Output noise voltage	B = 10 Hz to 100 kHz, T_A = 25 °C			50		µV
V_d	Dropout voltage	I_O = 250 mA, T_A = 25 °C			0.4	0.6	V
		I_O = 250 mA				0.82	V
V_{IL}	Control input logic low					0.82	V
V_{IH}	Control input logic high			2			V
I_I	Control input current	V_I = 6 V, V_C = 6 V, T_A = 25 °C			10		µA
C_O	Output bypass capacitance	ESR = 0.1 to 10 Ω, I_O = 0 to 250 mA, T_A = 25 °C		2	10		µF

(Refer to the test circuits, T_A = 25 °C, C_I = 0.1 µF, C_O = 2.2 µF unless otherwise specified).

Table 5. L4931ABxx33 electrical characteristics

Symbol	Parameter	Test conditions		Min.	Typ.	Max.	Unit
V_O	Output voltage	I_O = 5 mA, V_I = 5.3 V		3.267	3.3	3.333	V
		I_O = 5 mA, V_I = 5.3 V, T_A=-25 to 85 °C		3.234		3.366	
V_I	Operating input voltage	I_O = 250 mA				20	V
I_{out}	Output current limit				300		mA
ΔV_O	Line regulation	V_I = 4 to 20 V, I_O = 0.5 mA			3	15	mV
ΔV_O	Load regulation (1)	V_I = 4.2 V, I_O = 0.5 to 250 mA			3	15	mV
I_d	Quiescent current ON mode	V_I = 4.2 to 20 V, I_O = 0 mA			0.6	1	mA
		V_I = 4.2 to 20 V, I_O = 250 mA			4	6	
	OFF mode	V_I = 6 V			50	100	µA
SVR	Supply voltage rejection	I_O = 5 mA V_I = 5.2 ± 1 V	f = 120 Hz		73		dB
			f = 1 kHz		70		
			f = 10 kHz		55		
eN	Output noise voltage	B = 10 Hz to 100 kHz			50		µV
V_d	Dropout voltage (1)	I_O = 250 mA			0.4	0.6	V
		I_O = 250 mA, T_A= -40 to 125 °C				0.8	V
V_{IL}	Control input logic low	T_A = -40 to 125 °C				0.8	V
V_{IH}	Control input logic high	T_A = -40 to 125 °C		2			V
I_I	Control input current	V_I = 6 V, V_C = 6 V			10		µA
C_O	Output bypass capacitance	ESR = 0.1 to 10 Ω, I_O = 0 to 250 mA		2	10		µF

1. For SO-8 package the maximum limit of load regulation and dropout should be increased by 20 mV.

(Refer to the test circuits, T_A = 25 °C, C_I = 0.1 µF, C_O = 2.2 µF unless otherwise specified).

Table 6. L4931Cxx33 electrical characteristics

Symbol	Parameter	Test conditions		Min.	Typ.	Max.	Unit
V_O	Output voltage	I_O = 5 mA, V_I = 5.3 V		3.234	3.3	3.366	V
		I_O = 5 mA, V_I = 5.3 V, T_A=-25 to 85 °C		3.168		3.432	
V_I	Operating input voltage	I_O = 250 mA				20	V
I_{out}	Output current limit				300		mA
ΔV_O	Line regulation	V_I = 4.1 to 20 V, I_O = 0.5 mA			3	18	mV
ΔV_O	Load regulation (1)	V_I = 4.3 V, I_O = 0.5 to 250 mA			3	18	mV
I_d	Quiescent current ON mode	V_I = 4.3 to 20 V, I_O = 0 mA			0.6	1	mA
		V_I = 4.3 to 20 V, I_O = 250 mA			4	6	
	OFF mode	V_I = 6 V			50	100	µA
SVR	Supply voltage rejection	I_O = 5 mA V_I = 5.3 ± 1 V	f = 120 Hz		73		dB
			f = 1 kHz		70		
			f = 10 kHz		55		
eN	Output noise voltage	B = 10 Hz to 100 kHz			50		µV
V_d	Dropout voltage (1)	I_O = 250 mA			0.4	0.6	V
		I_O = 250 mA, T_A= -40 to 125°C				0.8	V
V_{IL}	Control input logic low	T_A = -40 to 125 °C				0.8	V
V_{IH}	Control input logic high	T_A = -40 to 125 °C		2			V
I_I	Control input current	V_I = 6 V, V_C = 6 V			10		µA
C_O	Output bypass capacitance	ESR = 0.1 to 10 Ω, I_O = 0 to 250 mA		2	10		µF

1. For SO-8 package the maximum limit of load regulation and dropout should be increased by 20 mV.

(Refer to the test circuits, T_A = -40 to 125 °C, C_I = 0.1 µF, C_O = 2.2 µF unless otherwise specified).

Table 7. L4931Cxx33-TRY (automotive-grade) electrical characteristics

Symbol	Parameter	Test conditions		Min.	Typ.	Max.	Unit
V_O	Output voltage	I_O = 5 mA, V_I = 5.3 V, T_A = 25 °C		3.234	3.3	3.366	V
		I_O = 5 mA, V_I = 5.3 V		3.168		3.432	
V_I	Operating input voltage	I_O = 250 mA				20	V
I_{out}	Output current limit	T_A = 25 °C			300		mA
ΔV_O	Line regulation	V_I = 4.1 to 20 V, I_O = 0.5 mA				20	mV
ΔV_O	Load regulation	V_I = 4.3 V, I_O = 0.5 to 250 mA				38	mV
I_d	Quiescent current ON mode	V_I = 4.3 to 20 V, I_O = 0 mA				1	mA
		V_I = 4.3 to 20 V, I_O = 250 mA				6	
	OFF mode	V_I = 6 V				100	µA
SVR	Supply voltage rejection	I_O = 5 mA V_I = 5.3 ± 1 V T_A = 25 °C	f = 120 Hz		73		dB
			f = 1 kHz		70		
			f = 10 kHz		55		
eN	Output noise voltage	B = 10 Hz to 100 kHz, T_A = 25 °C			50		µV
V_d	Dropout voltage	I_O = 250 mA, T_A = 25 °C			0.4	0.6	V
		I_O = 250 mA				0.82	V
V_{IL}	Control input logic low					0.82	V
V_{IH}	Control input logic high			2			V
I_I	Control input current	V_I = 6 V, V_C = 6 V, T_A = 25 °C			10		µA
C_O	Output bypass capacitance	ESR = 0.1 to 10 Ω, I_O = 0 to 250 mA, T_A = 25 °C		2	10		µF

(Refer to the test circuits, T_A = 25 °C, C_I = 0.1 µF, C_O = 2.2 µF unless otherwise specified).

Table 8. L4931ABxx35 electrical characteristics

Symbol	Parameter	Test conditions		Min.	Typ.	Max.	Unit
V_O	Output voltage	I_O = 5 mA, V_I = 5.5 V		3.465	3.5	3.535	V
		I_O = 5 mA, V_I = 5.5 V, T_A=-25 to 85 °C		3.43		3.57	
V_I	Operating input voltage	I_O = 250 mA				20	V
I_{out}	Output current limit				300		mA
ΔV_O	Line regulation	V_I = 4.2 to 20 V, I_O = 0.5 mA			3	15	mV
ΔV_O	Load regulation (1)	V_I = 4.4 V, I_O = 0.5 to 250 mA			3	15	mV
I_d	Quiescent current ON mode	V_I = 4.4 to 20 V, I_O = 0 mA			0.6	1	mA
		V_I = 4.4 to 20 V, I_O = 250 mA			4	6	
	OFF mode	V_I = 6 V			50	100	µA
SVR	Supply voltage rejection	I_O = 5 mA V_I = 5.4 ± 1 V	f = 120 Hz		73		dB
			f = 1 kHz		70		
			f = 10 kHz		55		
eN	Output noise voltage	B = 10 Hz to 100 kHz			50		µV
V_d	Dropout voltage (1)	I_O = 250 mA			0.4	0.6	V
		I_O = 250 mA, T_A= -40 to 125 °C				0.8	V
V_{IL}	Control input logic low	T_A = -40 to 125 °C				0.8	V
V_{IH}	Control input logic high	T_A = -40 to 125 °C		2			V
I_I	Control input current	V_I = 6 V, V_C = 6 V			10		µA
C_O	Output bypass capacitance	ESR = 0.1 to 10 Ω, I_O = 0 to 250 mA		2	10		µF

1. For SO-8 package the maximum limit of load regulation and dropout should be increased by 20 mV.

(Refer to the test circuits, T_A = 25 °C, C_I = 0.1 µF, C_O = 2.2 µF unless otherwise specified).

Table 9. L4931Cxx35 electrical characteristics

Symbol	Parameter	Test conditions		Min.	Typ.	Max.	Unit
V_O	Output voltage	I_O = 5 mA, V_I = 5.5 V		3.43	3.5	3.57	V
		I_O = 5 mA, V_I = 5.5 V, T_A=-25 to 85 °C		3.36		3.64	
V_I	Operating input voltage	I_O = 250 mA				20	V
I_{out}	Output current limit				300		mA
ΔV_O	Line regulation	V_I = 4.3 to 20 V, I_O = 0.5 mA			3	18	mV
ΔV_O	Load regulation (1)	V_I = 4.5 V, I_O = 0.5 to 250 mA			3	18	mV
I_d	Quiescent current ON mode	V_I = 4.5 to 20 V, I_O = 0 mA			0.6	1	mA
		V_I = 4.5 to 20 V, I_O = 250 mA			4	6	
	OFF mode	V_I = 6 V			50	100	µA
SVR	Supply voltage rejection	I_O = 5 mA V_I = 5.5 ± 1 V	f = 120 Hz		73		dB
			f = 1 kHz		70		
			f = 10 kHz		55		
eN	Output noise voltage	B = 10 Hz to 100 kHz			50		µV
V_d	Dropout voltage (1)	I_O = 250 mA			0.4	0.6	V
		I_O = 250 mA, T_A= -40 to 125 °C				0.8	V
V_{IL}	Control input logic low	T_A= -40 to 125 °C				0.8	V
V_{IH}	Control input logic high	T_A= -40 to 125 °C		2			V
I_I	Control input current	V_I = 6 V, V_C = 6 V			10		µA
C_O	Output bypass capacitance	ESR = 0.1 to 10 Ω, I_O = 0 to 250 mA		2	10		µF

1. For SO-8 package the maximum limit of load regulation and dropout should be increased by 20 mV.

(Refer to the test circuits, T_A = 25 °C, C_I = 0.1 µF, C_O = 2.2 µF unless otherwise specified).

Table 10. L4931ABxx50 electrical characteristics

Symbol	Parameter	Test conditions		Min.	Typ.	Max.	Unit
V_O	Output voltage	I_O = 5 mA, V_I = 7 V		4.95	5	5.05	V
		I_O = 5 mA, V_I = 7 V, T_A=-25 to 85 °C		4.9		5.1	
V_I	Operating input voltage	I_O = 250 mA				20	V
I_{out}	Output current limit				300		mA
ΔV_O	Line regulation	V_I = 5.8 to 20 V, I_O = 0.5 mA			3.5	17.5	mV
ΔV_O	Load regulation (1)	V_I = 6 V, I_O = 0.5 to 250 mA			3	15	mV
I_d	Quiescent current ON mode	V_I = 6 to 20 V, I_O = 0 mA			0.6	1	mA
		V_I = 6 to 20 V, I_O = 250 mA			4	6	
	OFF mode	V_I = 6 V			50	100	µA
SVR	Supply voltage rejection	I_O = 5 mA V_I = 7 ± 1 V	f = 120 Hz		70		dB
			f = 1 kHz		67		
			f = 10 kHz		55		
eN	Output noise voltage	B = 10 Hz to 100 kHz			50		µV
V_d	Dropout voltage (1)	I_O = 250 mA			0.4	0.6	V
		I_O = 250 mA, T_A= -40 to 125 °C				0.8	V
V_{IL}	Control input logic low	T_A = -40 to 125 °C				0.8	V
V_{IH}	Control input logic high	T_A = -40 to 125 °C		2			V
I_I	Control input current	V_I = 6 V, V_C = 6 V			10		µA
C_O	Output bypass capacitance	ESR = 0.1 to 10 Ω, I_O = 0 to 250 mA		2	10		µF

1. For SO-8 package the maximum limit of load regulation and dropout should be increased by 20 mV.

(Refer to the test circuits, T_A = 25 °C, C_I = 0.1 µF, C_O = 2.2 µF unless otherwise specified).

Table 11. L4931Cxx50 electrical characteristics

Symbol	Parameter	Test conditions		Min.	Typ.	Max.	Unit
V_O	Output voltage	I_O = 5 mA, V_I = 7 V		4.9	5	5.1	V
		I_O = 5 mA, V_I = 7 V, T_A=-25 to 85 °C		4.8		5.2	
V_I	Operating input voltage	I_O = 250 mA				20	V
I_{out}	Output current limit				300		mA
ΔV_O	Line regulation	V_I = 5.8 to 20 V, I_O = 0.5 mA			3.5	17.5	mV
ΔV_O	Load regulation (1)	V_I = 6 V, I_O = 0.5 to 250 mA			3	15	mV
I_d	Quiescent current ON mode	V_I = 6 to 20 V, I_O = 0 mA			0.6	1	mA
		V_I = 6 to 20 V, I_O = 250 mA			4	6	
	OFF mode	V_I = 6 V			50	100	µA
SVR	Supply voltage rejection	I_O = 5 mA V_I = 7 ± 1 V	f = 120 Hz		70		dB
			f = 1 kHz		67		
			f = 10 kHz		55		
eN	Output noise voltage	B = 10 Hz to 100 kHz			50		µV
V_d	Dropout voltage (1)	I_O = 250 mA			0.4	0.6	V
		I_O = 250 mA, T_A= -40 to 125 °C				0.8	V
V_{IL}	Control input logic low	T_A = -40 to 125 °C				0.8	V
V_{IH}	Control input logic high	T_A = -40 to 125 °C		2			V
I_I	Control input current	V_I = 6 V, V_C = 6 V			10		µA
C_O	Output bypass capacitance	ESR = 0.1 to 10 Ω, I_O = 0 to 250 mA		2	10		µF

1. For SO-8 package the maximum limit of load regulation and dropout should be increased by 20 mV.

(Refer to the test circuits, T_A = 25 °C, C_I = 0.1 µF, C_O = 2.2 µF unless otherwise specified).

Table 12. L4931ABxx80 electrical characteristics

Symbol	Parameter	Test conditions		Min.	Typ.	Max.	Unit
V_O	Output voltage	I_O = 5 mA, V_I = 10 V		7.92	8	8.08	V
		I_O = 5 mA, V_I = 10 V, T_A=-25 to 85 °C		7.84		8.16	
V_I	Operating input voltage	I_O = 250 mA				20	V
I_{out}	Output current limit				300		mA
ΔV_O	Line regulation	V_I = 8.8 to 20 V, I_O = 0.5 mA			4	20	mV
ΔV_O	Load regulation (1)	V_I = 9 V, I_O = 0.5 to 250 mA			3	15	mV
I_d	Quiescent current ON mode	V_I = 9 to 20 V, I_O = 0 mA			0.8	1.6	mA
		V_I = 9 to 20 V, I_O = 250 mA			4.5	7	
	OFF mode	V_I = 6 V			70	140	µA
SVR	Supply voltage rejection	I_O = 5 mA V_I = 10 ± 1 V	f = 120 Hz		67		dB
			f = 1 kHz		64		
			f = 10 kHz		55		
eN	Output noise voltage	B = 10 Hz to 100 kHz			50		µV
V_d	Dropout voltage (1)	I_O = 250 mA			0.4	0.6	V
		I_O = 250 mA, T_A= -40 to 125 °C				0.8	V
V_{IL}	Control input logic low	T_A = -40 to 125 °C				0.8	V
V_{IH}	Control input logic high	T_A = -40 to 125 °C		2			V
I_I	Control input current	V_I = 6 V, V_C = 6 V			10		µA
C_O	Output bypass capacitance	ESR = 0.1 to 10 Ω, I_O = 0 to 250 mA		2	10		µF

1. For SO-8 package the maximum limit of load regulation and dropout should be increased by 20 mV.

(Refer to the test circuits, T_A = 25 °C, C_I = 0.1 µF, C_O = 2.2 µF unless otherwise specified).

Table 13. L4931Cxx80 electrical characteristics

Symbol	Parameter	Test conditions		Min.	Typ.	Max.	Unit
V_O	Output voltage	I_O = 5 mA, V_I = 10 V		7.84	8	8.16	V
		I_O = 5 mA, V_I = 10 V, T_A=-25 to 85 °C		7.68		8.32	
V_I	Operating input voltage	I_O = 250 mA				20	V
I_{out}	Output current limit				300		mA
ΔV_O	Line regulation	V_I = 8.9 to 20 V, I_O = 0.5 mA			4	24	mV
ΔV_O	Load regulation (1)	V_I = 9.1 V, I_O = 0.5 to 250 mA			3	18	mV
I_d	Quiescent current ON mode	V_I = 9.1 to 20 V, I_O = 0 mA			0.8	1.6	mA
		V_I = 9.1 to 20 V, I_O = 250 mA			4.5	7	
	OFF mode	V_I = 6 V			70	140	µA
SVR	Supply voltage rejection	I_O = 5 mA V_I = 10.1 ± 1 V	f = 120 Hz		67		dB
			f = 1 kHz		64		
			f = 10 kHz		55		
eN	Output noise voltage	B = 10 Hz to 100 kHz			50		µV
V_d	Dropout voltage (1)	I_O = 250 mA			0.4	0.6	V
		I_O = 250 mA, T_A= -40 to 125 °C				0.8	V
V_{IL}	Control input logic low	T_A = -40 to 125 °C				0.8	V
V_{IH}	Control input logic high	T_A = -40 to 125 °C		2			V
I_I	Control input current	V_I = 6 V, V_C = 6 V			10		µA
C_O	Output bypass capacitance	ESR = 0.1 to 10 Ω, I_O = 0 to 250 mA		2	10		µF

1. For SO-8 package the maximum limit of load regulation and dropout should be increased by 20 mV.

(Refer to the test circuits, T_A = 25 °C, C_I = 0.1 µF, C_O = 2.2 µF unless otherwise specified).

Table 14. L4931ABxx120 electrical characteristics

Symbol	Parameter	Test conditions		Min.	Typ.	Max.	Unit
V_O	Output voltage	I_O = 5 mA, V_I = 14 V		11.88	12	12.12	V
		I_O = 5 mA, V_I = 14 V, T_A=-25 to 85 °C		11.76		12.24	
V_I	Operating input voltage	I_O = 250 mA				20	V
I_{out}	Output current limit				300		mA
ΔV_O	Line regulation	V_I = 12.8 to 20 V, I_O = 0.5 mA			4	20	mV
ΔV_O	Load regulation (1)	V_I = 13 V, I_O = 0.5 to 250 mA			3	15	mV
I_d	Quiescent current ON mode	V_I = 13 to 20 V, I_O = 0 mA			0.8	1.6	mA
		V_I = 13 to 20 V, I_O = 250 mA			4.5	7	
	OFF mode	V_I = 6 V			90	180	µA
SVR	Supply voltage rejection	I_O = 5 mA V_I = 14 ± 1 V	f = 120 Hz		64		dB
			f = 1 kHz		61		
			f = 10 kHz		55		
eN	Output noise voltage	B = 10 Hz to 100 kHz			50		µV
V_d	Dropout voltage (1)	I_O = 250 mA			0.4	0.6	V
		I_O = 250 mA, T_A= -40 to 125 °C				0.8	V
V_{IL}	Control input logic low	T_A = -40 to 125 °C				0.8	V
V_{IH}	Control input logic high	T_A = -40 to 125 °C		2			V
I_I	Control input current	V_I = 6 V, V_C = 6 V			10		µA
C_O	Output bypass capacitance	ESR = 0.1 to 10 Ω, I_O = 0 to 250 mA		2	10		µF

1. For SO-8 package the maximum limit of load regulation and dropout should be increased by 20 mV.

(Refer to the test circuits, T_A = 25 °C, C_I = 0.1 µF, C_O = 2.2 µF unless otherwise specified).

Table 15. L4931Cxx120 electrical characteristics

Symbol	Parameter	Test conditions		Min.	Typ.	Max.	Unit
V_O	Output voltage	I_O = 5 mA, V_I = 14 V		11.76	12	12.24	V
		I_O = 5 mA, V_I = 14 V, T_A=-25 to 85 °C		11.52		12.48	
V_I	Operating input voltage	I_O = 250 mA				20	V
I_{out}	Output current limit				300		mA
ΔV_O	Line regulation	V_I = 12.9 to 20 V, I_O = 0.5 mA			4	24	mV
ΔV_O	Load regulation (1)	V_I = 13.1 V, I_O = 0.5 to 250 mA			3	18	mV
I_d	Quiescent current ON mode	V_I = 13.1 to 20 V, I_O = 0 mA			0.8	1.6	mA
		V_I = 13.1 to 20 V, I_O = 250 mA			4.5	7	
	OFF mode	V_I = 6 V			90	180	µA
SVR	Supply voltage rejection	I_O = 5 mA V_I = 14.1 ± 1 V	f = 120 Hz		64		dB
			f = 1 kHz		61		
			f = 10 kHz		55		
eN	Output noise voltage	B = 10 Hz to 100 kHz			50		µV
V_d	Dropout voltage (1)	I_O = 250 mA			0.4	0.6	V
		I_O = 250 mA, T_A= -40 to 125 °C				0.8	V
V_{IL}	Control input logic low	T_A = -40 to 125 °C				0.8	V
V_{IH}	Control input logic high	T_A = -40 to 125 °C		2			V
I_I	Control input current	V_I = 6 V, V_C = 6 V			10		µA
C_O	Output bypass capacitance	ESR = 0.1 to 10 Ω, I_O = 0 to 250 mA		2	10		µF

1. For SO-8 package the maximum limit of load regulation and dropout should be increased by 20 mV.

6 Typical application

Figure 4. Line regulation vs temperature

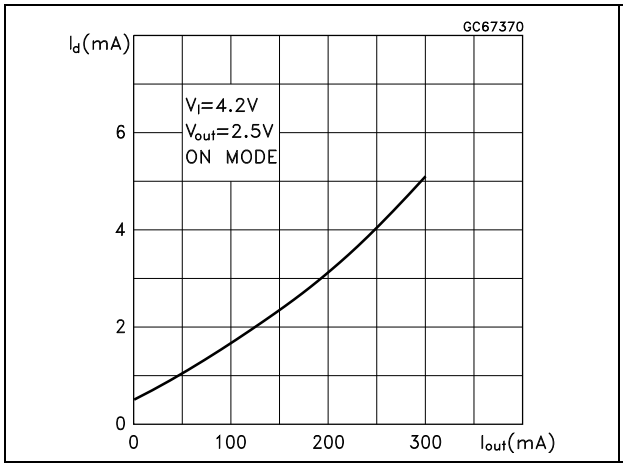

Figure 5. Dropout voltage vs temperature

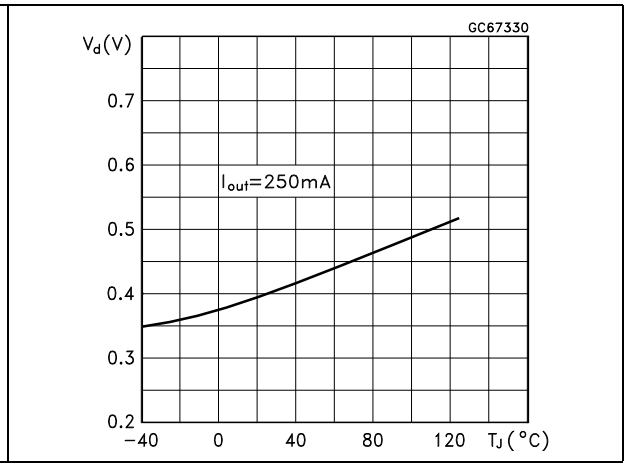

Figure 6. Supply current vs input voltage

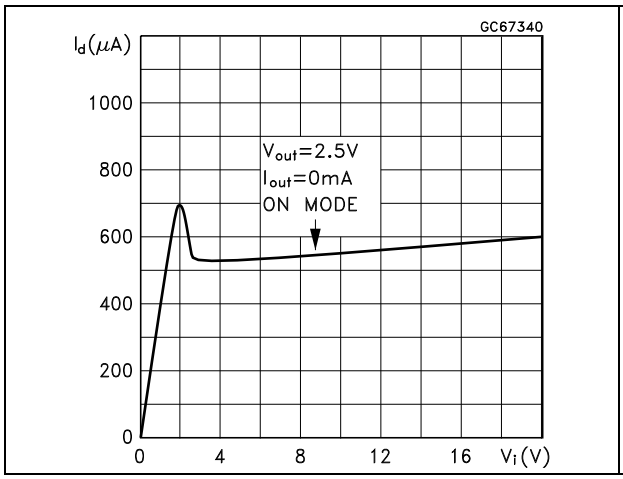

Figure 7. Supply current vs temperature

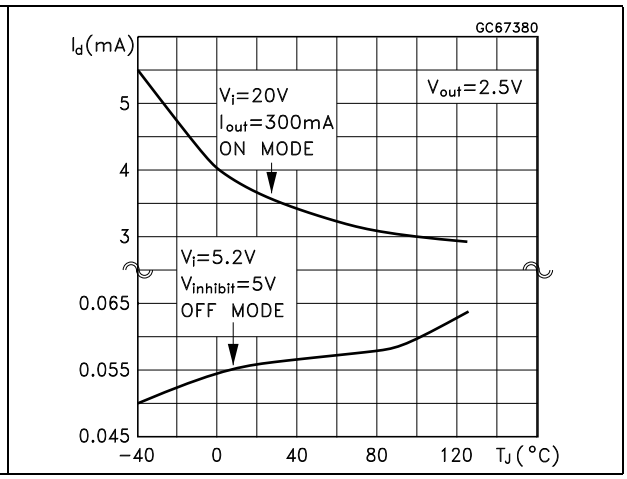

Figure 8. Short-circuit current vs dropout voltage

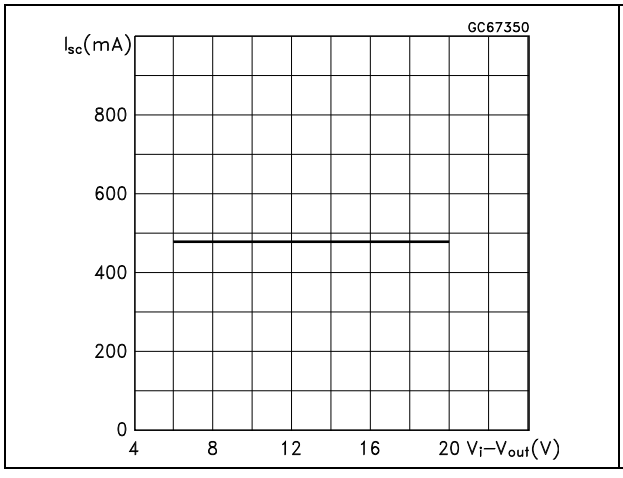

Figure 9. SVR vs input voltage signal frequency

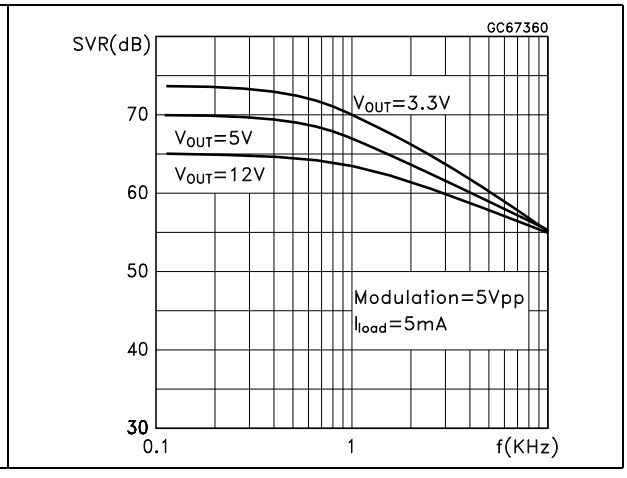

7 Package mechanical data

In order to meet environmental requirements, ST offers these devices in different grades of ECOPACK® packages, depending on their level of environmental compliance. ECOPACK® specifications, grade definitions and product status are available at: *www.st.com*. ECOPACK® is an ST trademark.

Table 16. TO-92 mechanical data

Dim.	mm		
	Min.	Typ.	Max.
A	4.32		4.95
b	0.36		0.51
D	4.45		4.95
E	3.30		3.94
e	2.41		2.67
e1	1.14		1.40
L	12.70		15.49
R	2.16		2.41
S1	0.92		1.52
W	0.41		0.56
V		5°	

Figure 10. TO-92 drawings

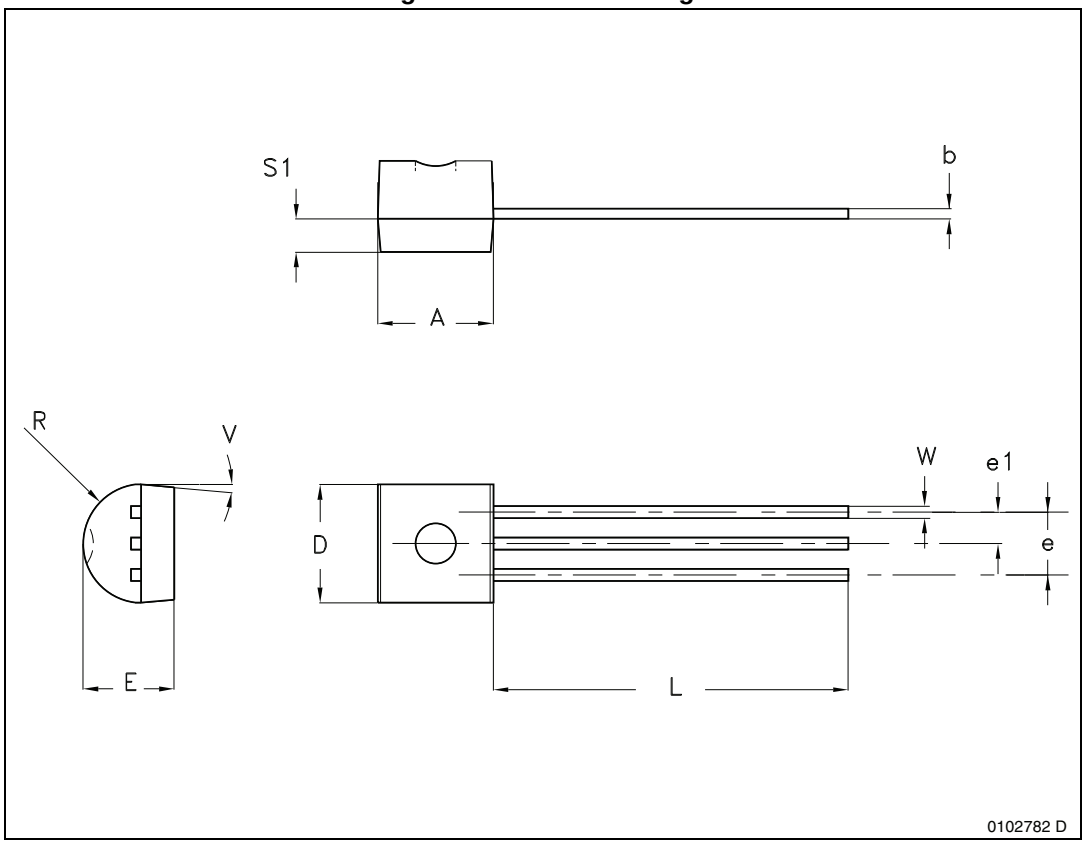

Table 17. PPAK mechanical data

Dim.	mm		
	Min.	Typ.	Max.
A	2.2		2.4
A1	0.9		1.1
A2	0.03		0.23
B	0.4		0.6
B2	5.2		5.4
C	0.45		0.6
C2	0.48		0.6
D	6		6.2
D1		5.1	
E	6.4		6.6
E1		4.7	
e		1.27	
G	4.9		5.25
G1	2.38		2.7
H	9.35		10.1
L2		0.8	1
L4	0.6		1
L5	1		
L6		2.8	
R		0.20	
V2	0°		8°

Figure 11. PPAK drawings

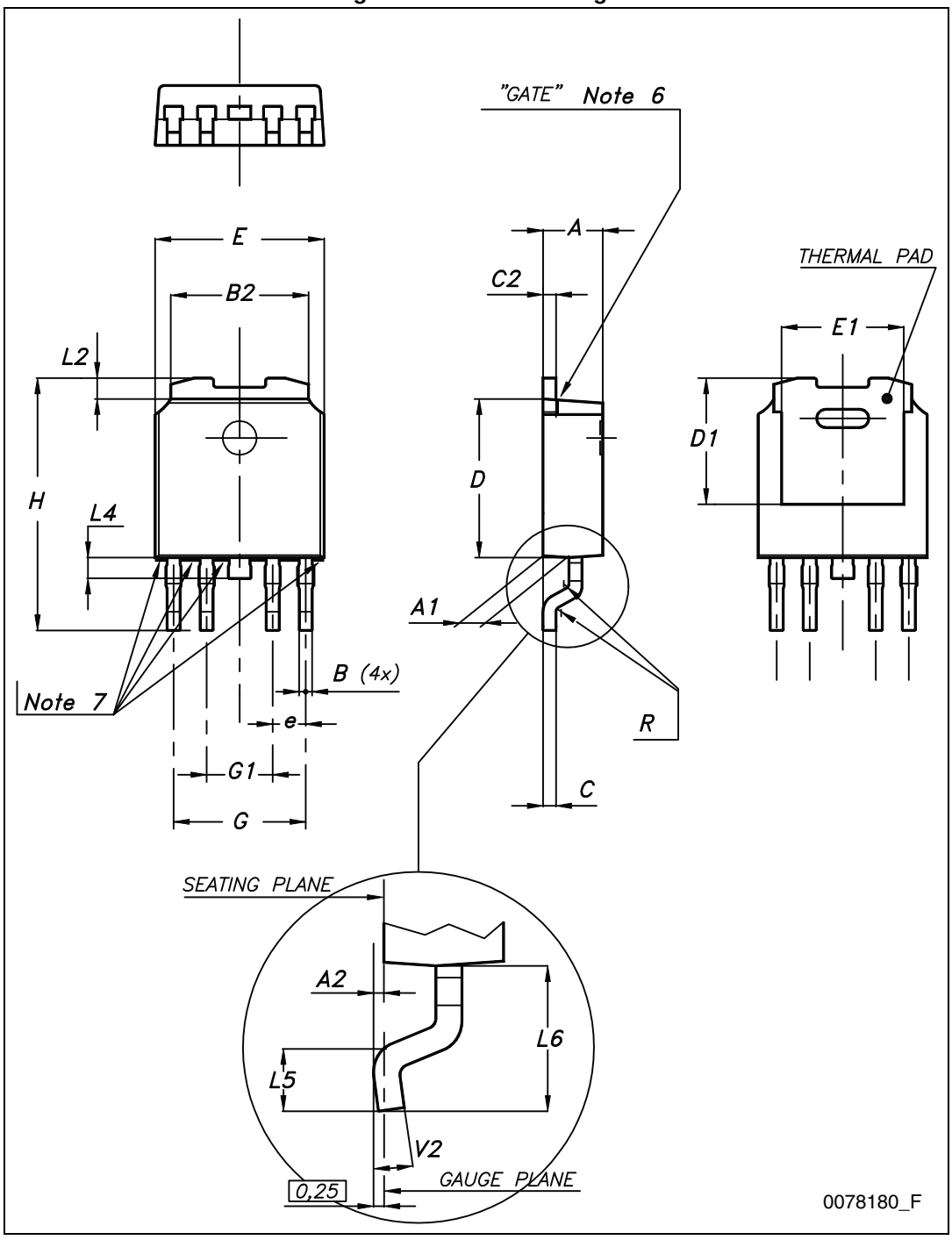

Table 18.DPAK mechanical data

Dim.	mm		
	Min.	Typ.	Max.
A	2.20		2.40
A1	0.90		1.10
A2	0.03		0.23
b	0.64		0.90
b4	5.20		5.40
c	0.45		0.60
c2	0.48		0.60
D	6.00		6.20
D1		5.10	
E	6.40		6.60
E1		4.70	
e		2.28	
e1	4.40		4.60
H	9.35		10.10
L	1.00		1.50
(L1)		2.80	
L2		0.80	
L4	0.60		1.00
R		0.20	
V2	0°		8°

Figure 12. DPAK drawings

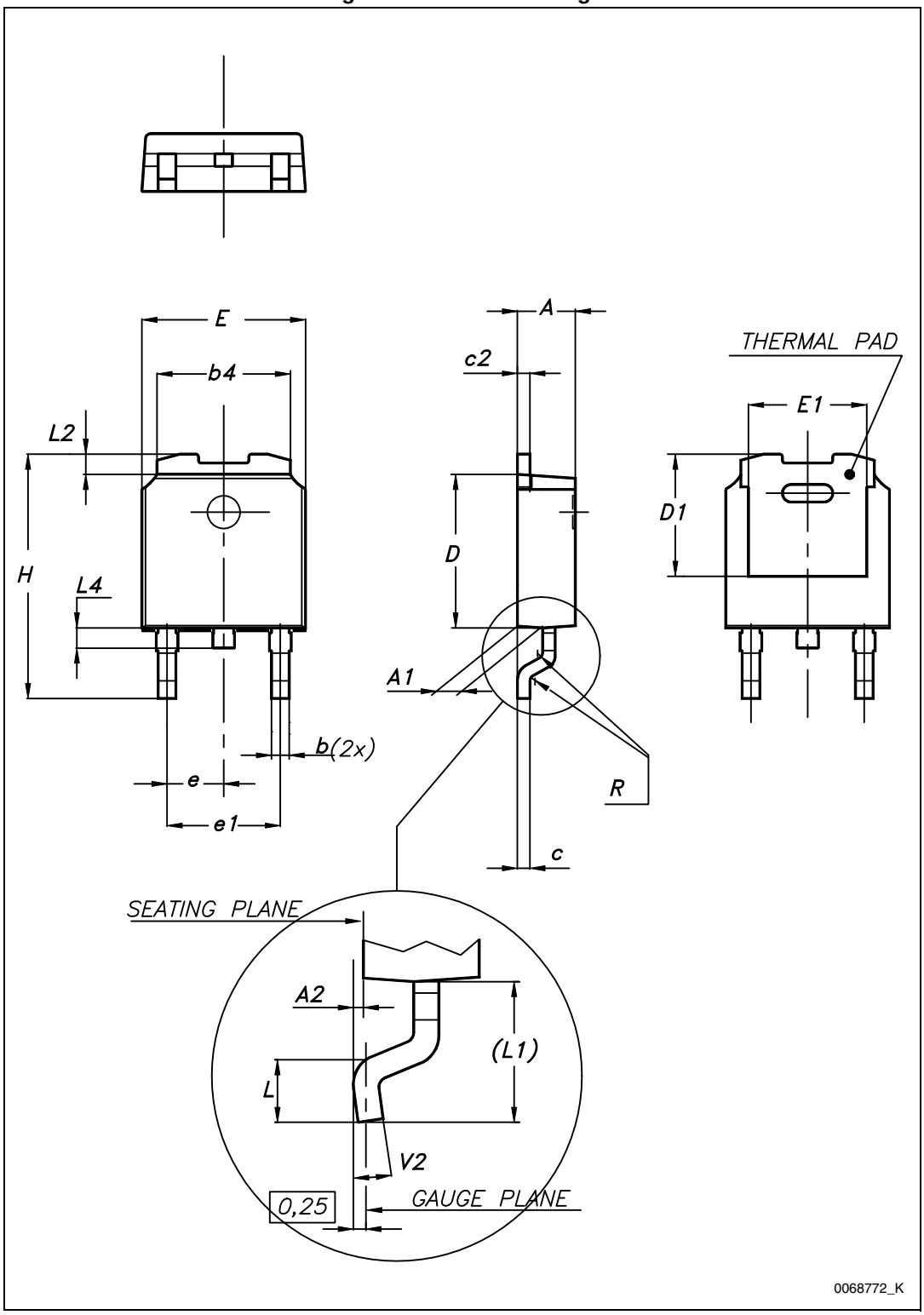

Figure 13. DPAK footprint [(a)]

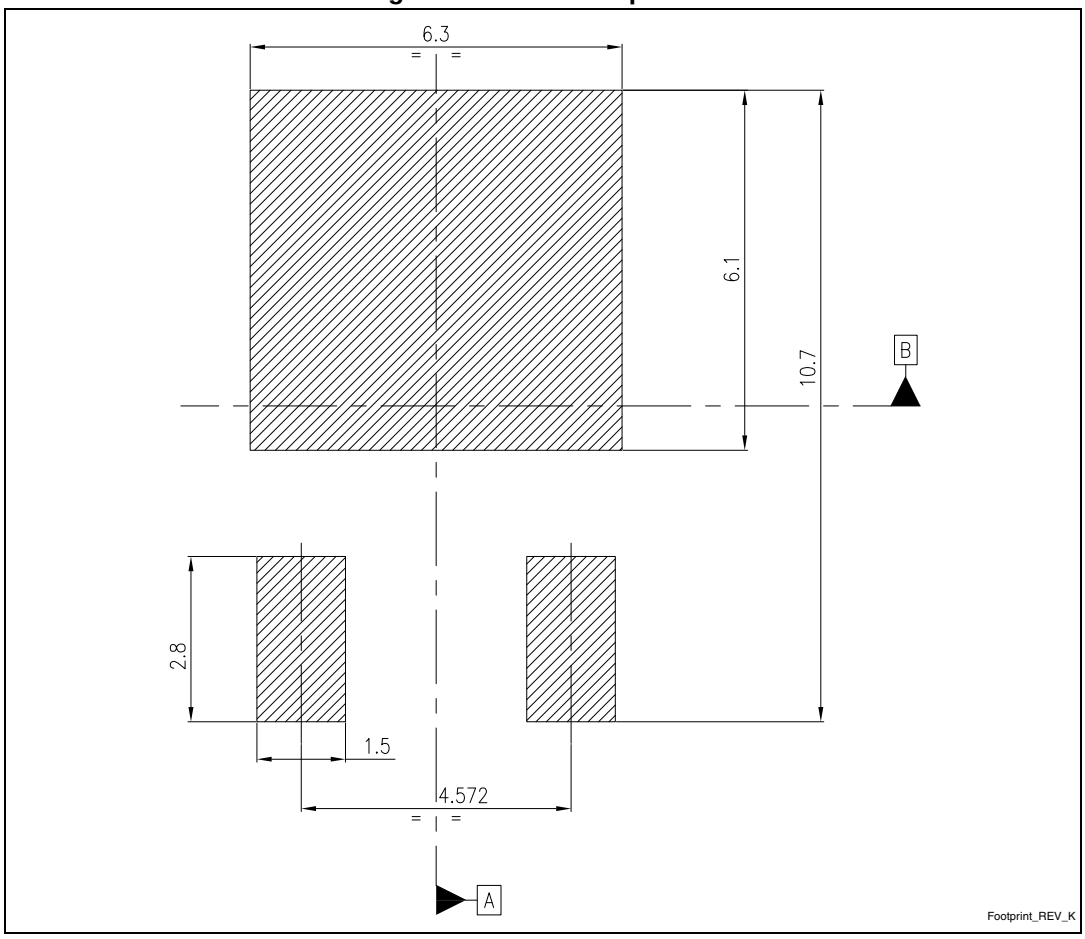

a. All dimensions are in millimeters.

Table 19. SO-8 mechanical data

Dim.	mm		
	Min.	Typ.	Max.
A			1.75
A1	0.10		0.25
A2	1.25		
b	0.28		0.48
c	0.17		0.23
D	4.80	4.90	5.00
E	5.80	6.00	6.20
E1	3.80	3.90	4.00
e		1.27	
h	0.25		0.50
L	0.40		1.27
L1		1.04	
k	0°		8°
ccc			0.10

Figure 14. SO-8 drawings

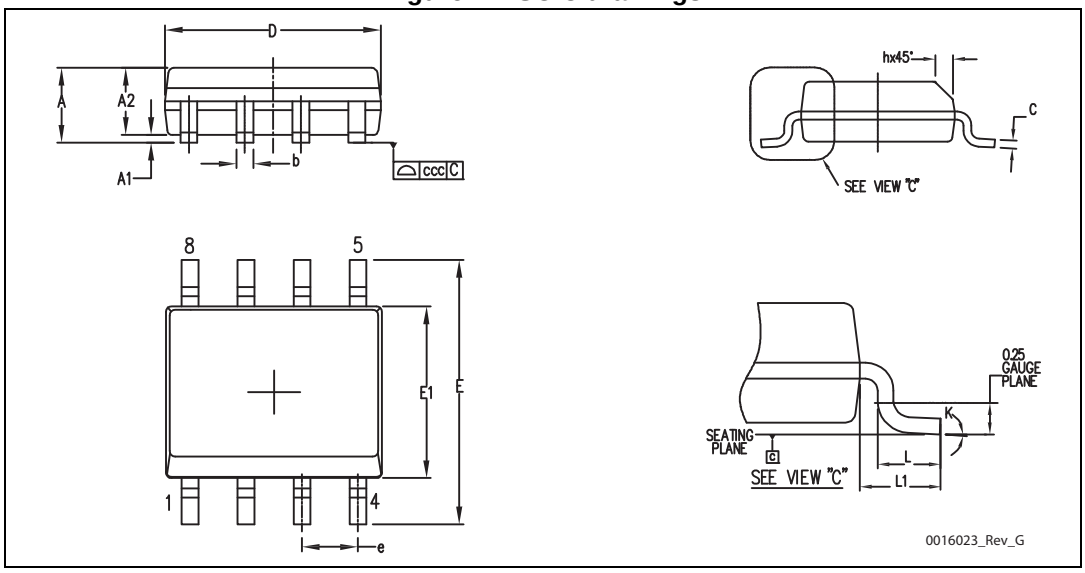

8 Packaging mechanical data

Table 20. TO-92 tape and reel mechanical data

Dim.	mm		
	Min.	Typ.	Max.
A1		4.80	
T		3.80	
T1		1.60	
T2		2.30	
d		0.48	
Po	12.5		12.9
P2	5.65		7.05
F1, F2	2.44	2.54	2.94
delta H		±2	
W	17.5	18.00	19
W0	5.7		6.3
W1	8.5		9.25
W2		0.50	
H		18.50	18.70
H0	15.50		16.50
H1		25.00	
D0	3.8		4.2
t		0.90	
L1		3	
delta P		±1	
u		50	
Φ1		360	
Φ2		30	

Figure 15. TO-92 tape and reel dimensions

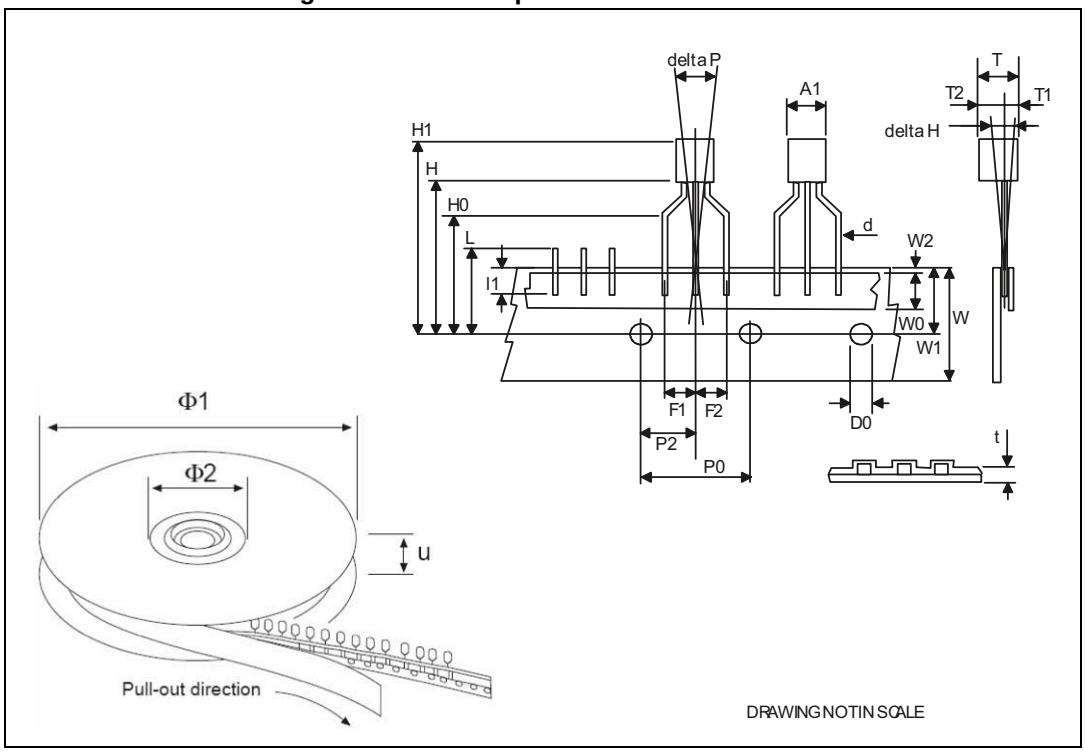

Table 21. PPAK and DPAK tape and reel mechanical data

Tape			Reel		
Dim.	mm		Dim.	mm	
	Min.	Max.		Min.	Max.
A0	6.8	7	A		330
B0	10.4	10.6	B	1.5	
B1		12.1	C	12.8	13.2
D	1.5	1.6	D	20.2	
D1	1.5		G	16.4	18.4
E	1.65	1.85	N	50	
F	7.4	7.6	T		22.4
K0	2.55	2.75			
P0	3.9	4.1	Base qty.		2500
P1	7.9	8.1	Bulk qty.		2500
P2	1.9	2.1			
R	40				
T	0.25	0.35			
W	15.7	16.3			

Figure 16. Tape for PPAK and DPAK

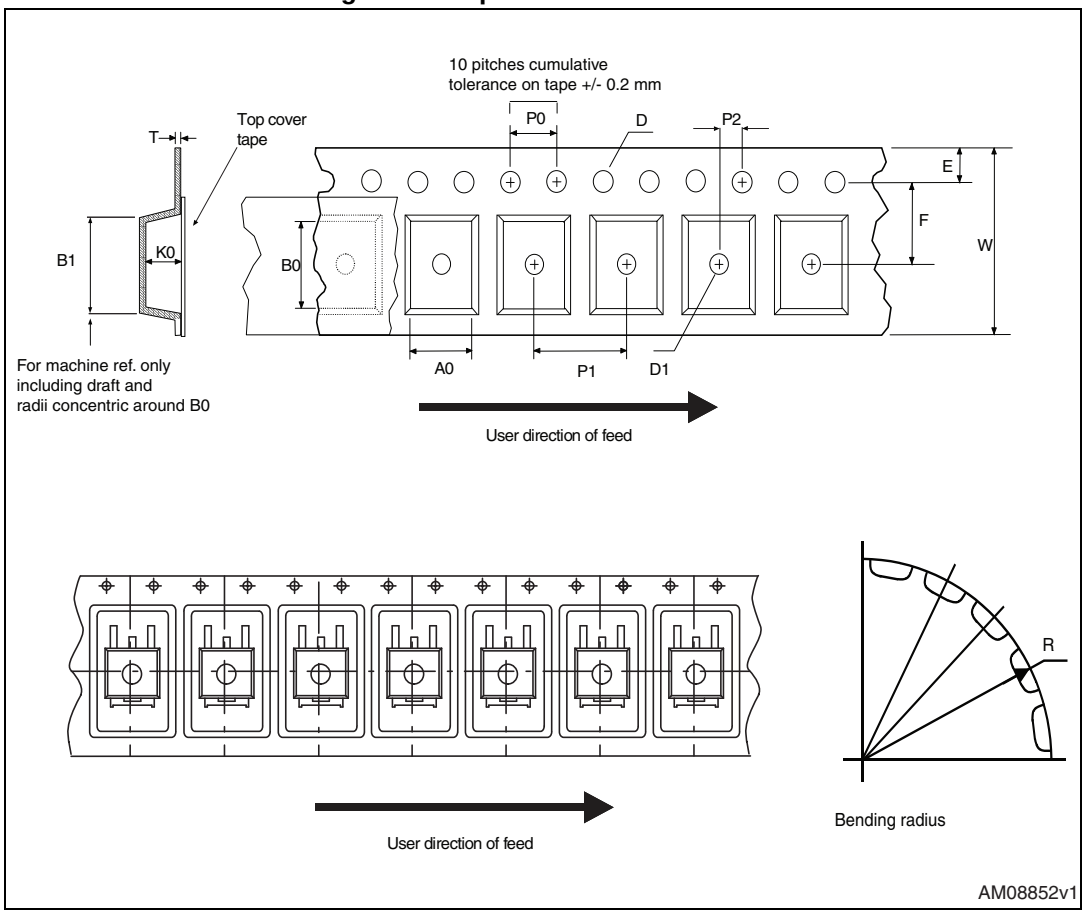

Figure 17. Reel for PPAK and DPAK

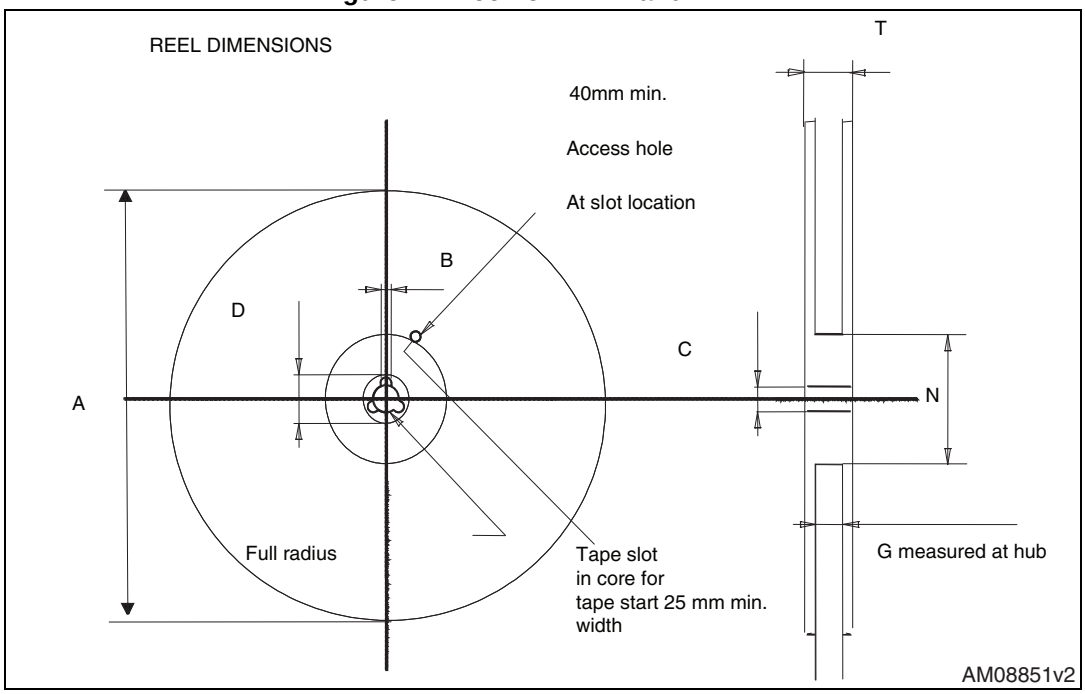

Table 22. SO-8 tape and reel mechanical data

Dim.	mm		
	Min.	Typ.	Max.
A			330
C	12.8		13.2
D	20.2		
N	60		
T			22.4
Ao	8.1		8.5
Bo	5.5		5.9
Ko	2.1		2.3
Po	3.9		4.1
P	7.9		8.1

Figure 18. SO-8 tape and reel dimensions

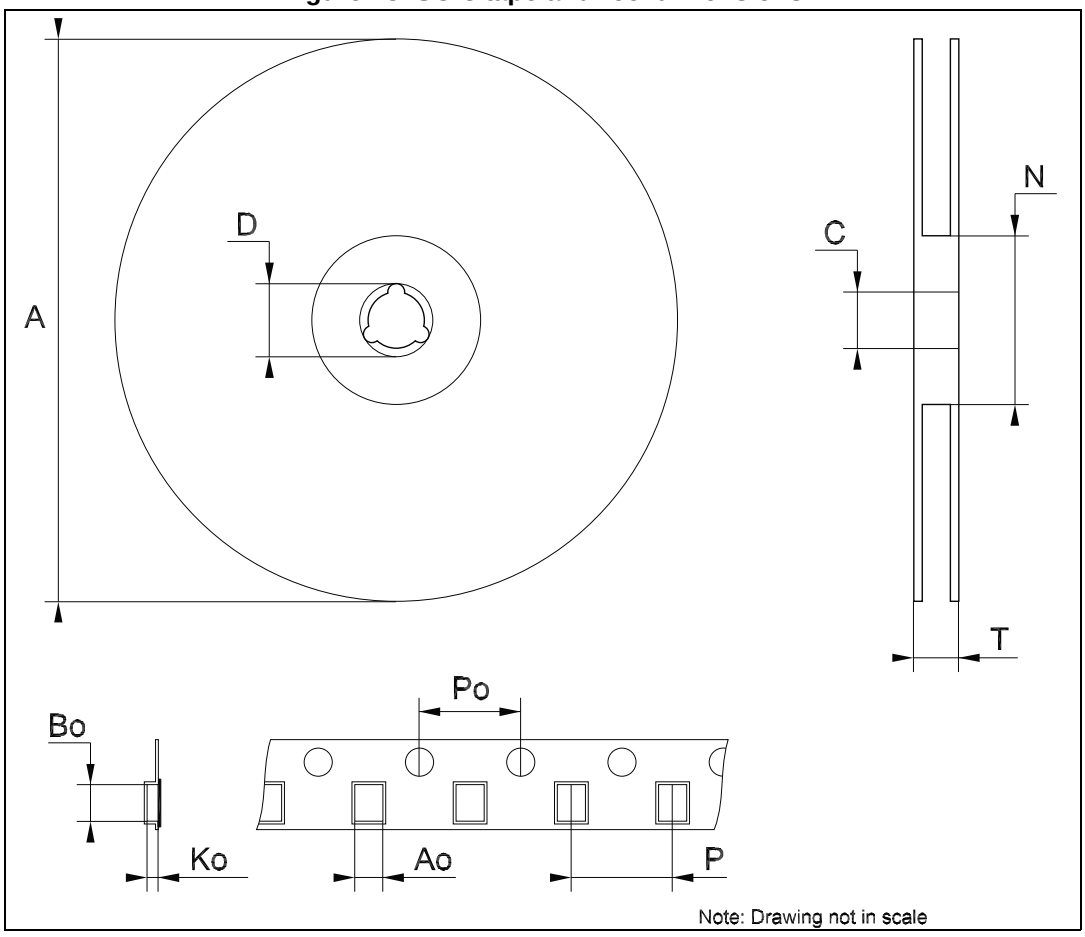

9 Ordering information

Table 23. Order codes

Packages					Output voltage
TO-92	PPAK	DPAK	SO-8	SO-8 (automotive-grade)	
			L4931CD27-TR	L4931CD27-TRY	2.7 V
L4931CZ33-AP		L4931CDT33-TR	L4931CD33-TR	L4931CD33-TRY	3.3 V
		L4931ABDT33-TR	L4931ABD33-TR		3.3 V
			L4931CD35-TR		3.5 V
		L4931ABDT35TR	L4931ABD35-TR		3.5 V
L4931CZ50-AP	L4931CPT50-TR	L4931CDT50-TR	L4931CD50-TR		5 V
		L4931ABDT50-TR	L4931ABD50-TR		5 V
			L4931CD80-TR		8 V
		L4931ABDT80-TR			8 V
			L4931CD120-TR		12 V
			L4931ABD120TR		12 V

10 Revision history

Table 24. Document revision history

Date	Revision	Changes
21-Jun-2004	11	Document updating.
14-Jun-2006	12	Order codes updated.
31-Jan-2008	13	Added: *Table 1* and new order codes for Automotive grade products.
20-Feb-2008	14	Modified: *Table 23 on page 36*.
11-Mar-2008	15	Modified: *Table 1 on page 1* and *Table 23 on page 36*.
15-Jul-2008	16	Modified: *Table 1 on page 1* and *Table 23 on page 36*.
18-Aug-2008	17	Modified: *Table 23 on page 36*.
30-Oct-2013	18	Changed the L4931ABxx and L4931Cxx to L4931. Updated: Description in cover page. Deleted table1: Device summary. Updated *Figure 2: Pin connections (top view)*, *Table 2: Thermal data*, *Section 5: Electrical characteristics* and *Section 7: Package mechanical data*. Added *Section 8: Packaging mechanical data*. Minor text changes.

Please Read Carefully:

Information in this document is provided solely in connection with ST products. STMicroelectronics NV and its subsidiaries (“ST”) reserve the right to make changes, corrections, modifications or improvements, to this document, and the products and services described herein at any time, without notice.

All ST products are sold pursuant to ST’s terms and conditions of sale.

Purchasers are solely responsible for the choice, selection and use of the ST products and services described herein, and ST assumes no liability whatsoever relating to the choice, selection or use of the ST products and services described herein.

No license, express or implied, by estoppel or otherwise, to any intellectual property rights is granted under this document. If any part of this document refers to any third party products or services it shall not be deemed a license grant by ST for the use of such third party products or services, or any intellectual property contained therein or considered as a warranty covering the use in any manner whatsoever of such third party products or services or any intellectual property contained therein.

UNLESS OTHERWISE SET FORTH IN ST’S TERMS AND CONDITIONS OF SALE ST DISCLAIMS ANY EXPRESS OR IMPLIED WARRANTY WITH RESPECT TO THE USE AND/OR SALE OF ST PRODUCTS INCLUDING WITHOUT LIMITATION IMPLIED WARRANTIES OF MERCHANTABILITY, FITNESS FOR A PARTICULAR PURPOSE (AND THEIR EQUIVALENTS UNDER THE LAWS OF ANY JURISDICTION), OR INFRINGEMENT OF ANY PATENT, COPYRIGHT OR OTHER INTELLECTUAL PROPERTY RIGHT.

ST PRODUCTS ARE NOT DESIGNED OR AUTHORIZED FOR USE IN: (A) SAFETY CRITICAL APPLICATIONS SUCH AS LIFE SUPPORTING, ACTIVE IMPLANTED DEVICES OR SYSTEMS WITH PRODUCT FUNCTIONAL SAFETY REQUIREMENTS; (B) AERONAUTIC APPLICATIONS; (C) AUTOMOTIVE APPLICATIONS OR ENVIRONMENTS, AND/OR (D) AEROSPACE APPLICATIONS OR ENVIRONMENTS. WHERE ST PRODUCTS ARE NOT DESIGNED FOR SUCH USE, THE PURCHASER SHALL USE PRODUCTS AT PURCHASER’S SOLE RISK, EVEN IF ST HAS BEEN INFORMED IN WRITING OF SUCH USAGE, UNLESS A PRODUCT IS EXPRESSLY DESIGNATED BY ST AS BEING INTENDED FOR “AUTOMOTIVE, AUTOMOTIVE SAFETY OR MEDICAL” INDUSTRY DOMAINS ACCORDING TO ST PRODUCT DESIGN SPECIFICATIONS. PRODUCTS FORMALLY ESCC, QML OR JAN QUALIFIED ARE DEEMED SUITABLE FOR USE IN AEROSPACE BY THE CORRESPONDING GOVERNMENTAL AGENCY.

Resale of ST products with provisions different from the statements and/or technical features set forth in this document shall immediately void any warranty granted by ST for the ST product or service described herein and shall not create or extend in any manner whatsoever, any liability of ST.

ST and the ST logo are trademarks or registered trademarks of ST in various countries.
Information in this document supersedes and replaces all information previously supplied.
The ST logo is a registered trademark of STMicroelectronics. All other names are the property of their respective owners.

© 2013 STMicroelectronics - All rights reserved

STMicroelectronics group of companies

Australia - Belgium - Brazil - Canada - China - Czech Republic - Finland - France - Germany - Hong Kong - India - Israel - Italy - Japan - Malaysia - Malta - Morocco - Philippines - Singapore - Spain - Sweden - Switzerland - United Kingdom - United States of America

www.st.com